Structural Integrity Modelling of an Early Bronze Age "Corridor House" in Helike of Achaea, NW Peloponnese

KORMANN, Mariza, KATSAROU, Stella, KATSONOPOULOU, Dora and LOCK, Gary

Published version

KORMANN, Mariza, KATSAROU, Stella, KATSONOPOULOU, Dora and LOCK, Gary (2015). Structural Integrity Modelling of an Early Bronze Age "Corridor House" in Helike of Achaea, NW Peloponnese. In: CAMPANA, Stefano, SCOPIGNO, Roberto, CARPENTIERO, Gabriella and CIRILLO, Marianna, (eds.) CAA2015 Proceedings of the 43rd annual conference on computer applications and quantitative methods in archaeology. Oxford, Archaeopress Archaeology.

Copyright and re-use policy

Structural Integrity Modelling of an Early Bronze Age "Corridor House" in Helike of Achaea, NW Peloponnese

Mariza Kormann, Stella Katsarou, Dora Katsonopoulou and Gary Lock

Sheffield Hallam University, Paloe Dept, The Helike Project, Oxford University

The Helike Delta

The Helike Corridor House (HCH)

- The Corridor feature
- Its function

HCH within Early Helladic Settlement

- The HCH within the proto-urban settlement
- The socio economic importance of the HCH

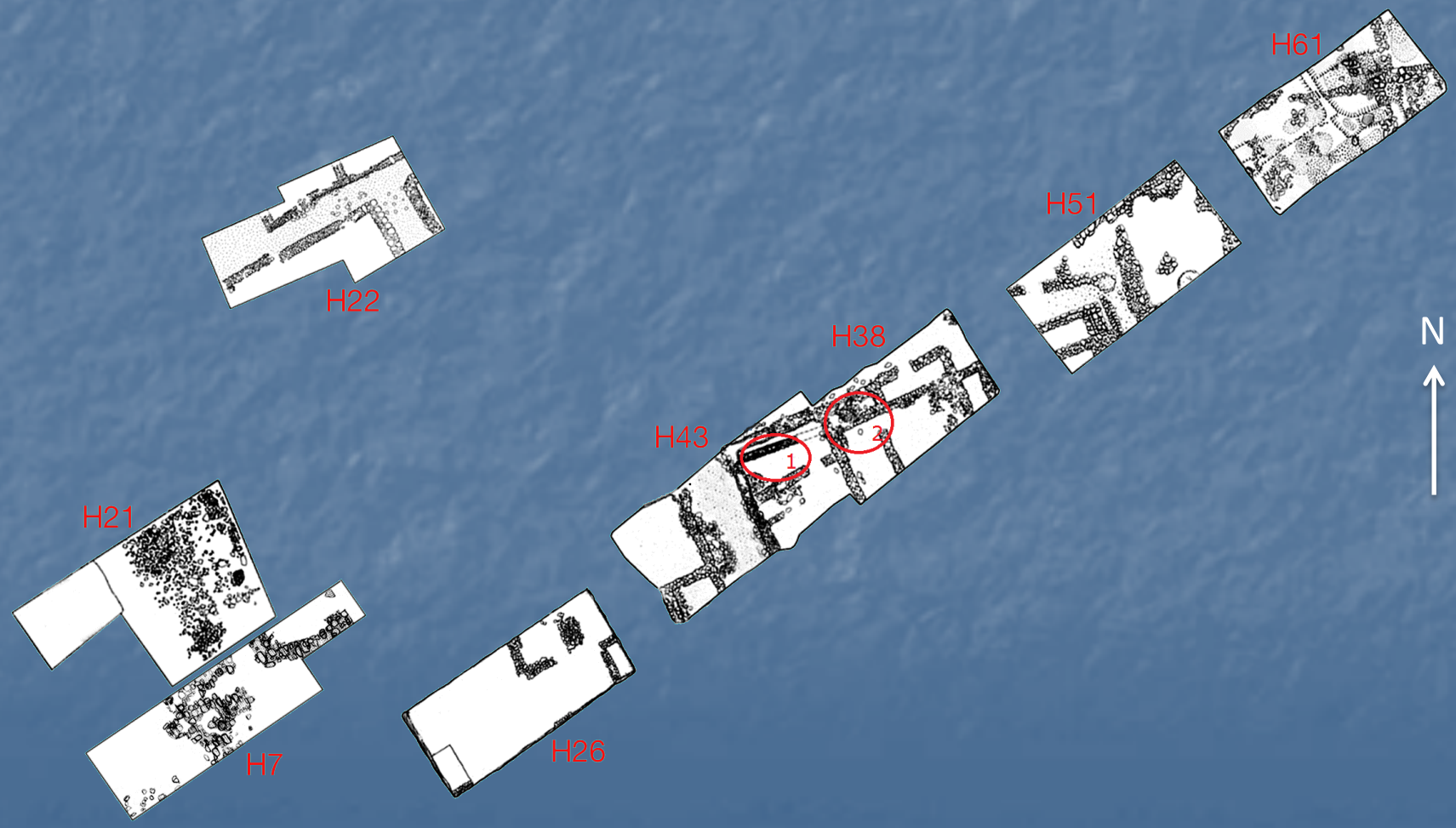

Aims and Objectives

- Aims
  - Explore materials and plan alterations on the Helike Corridor House (HCH) through structural integrity studies
- Objectives
  1. What is the structural value of the added corridors
  2. Whether the geometry of the house would support a second floor
  3. To study the effects of redesigned geometry from earlier phase
- Methodology
  - Determine the mechanical properties of building materials
  - Perform structural integrity based on finite element modelling
  - Comparative analysis and validation with Lerna's House of the Tiles

Related Previous Work

- Interpretation of corridor houses
  - The House of the Tiles at Lerna
- Structural analysis in cultural heritage
  - Seismic vulnerability of ancient buildings
  - Restoration of monastic buildings
  - Historical reconstructions
  - Durability of materials

Geometry Modelling of HCH

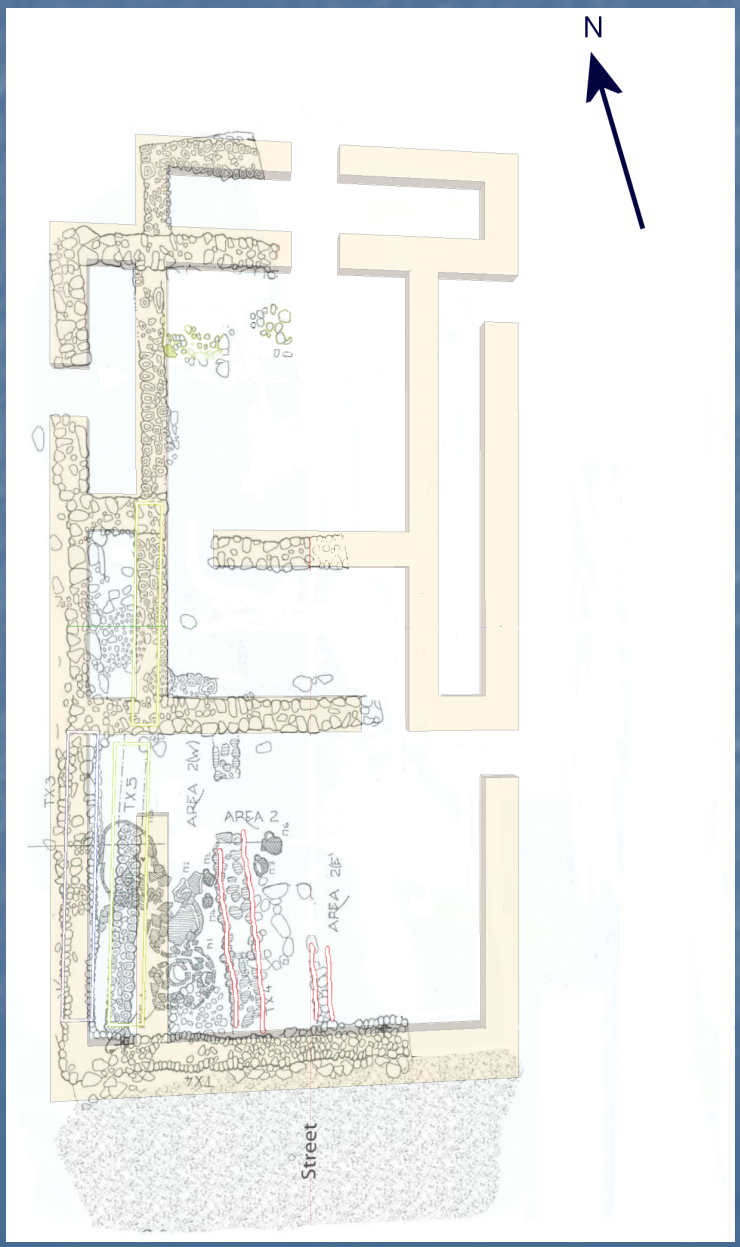

The Reconstructed HCH

View from the North East

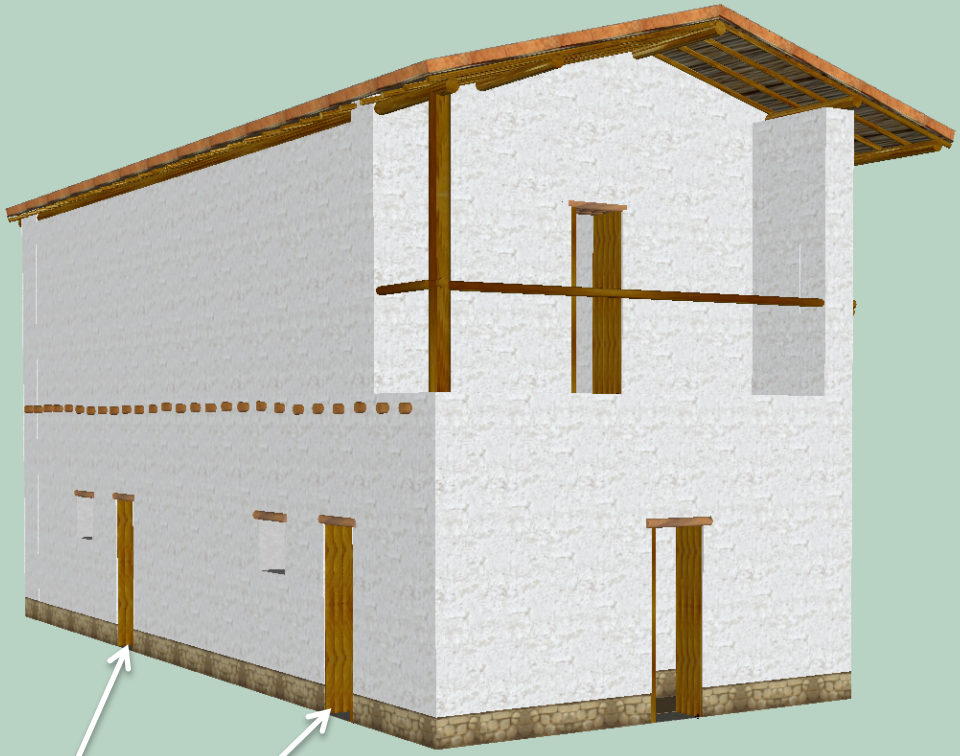

Stairway to upper floor

Large room at the back

View from the North West

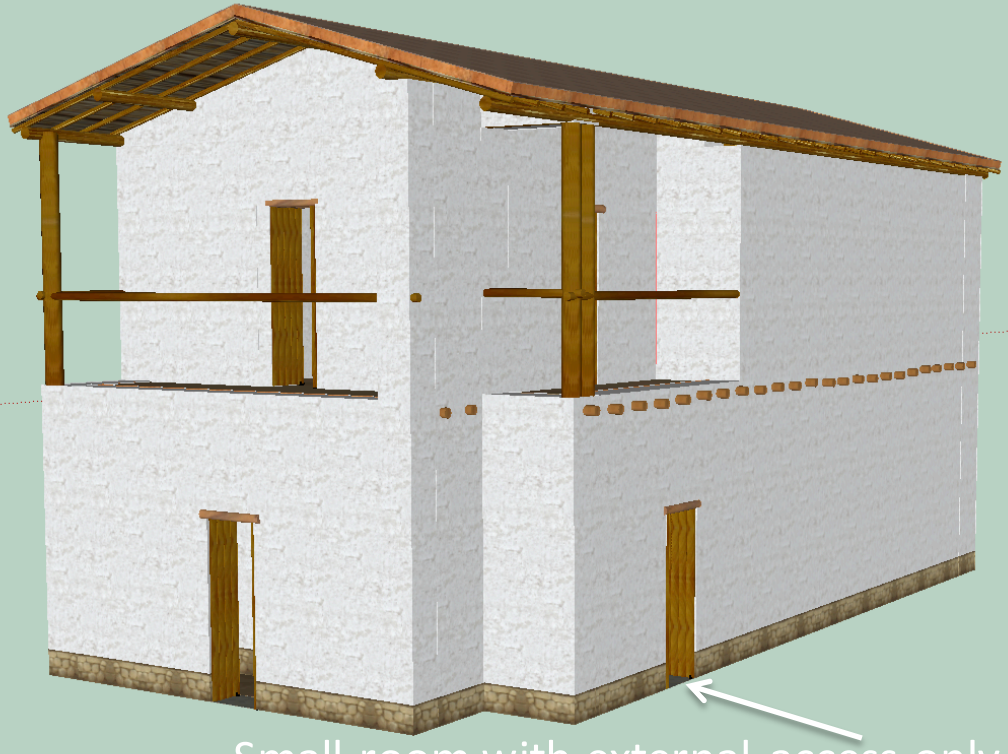

Small room with external access only

Roof and upstairs floor

- Roof
  - Wooden structure, reeds, rammed earth, tiles
- Upstairs floor
  - Wooden structure, reeds, mud
- Staircase
  - Wooden structure

Materials Characterisation

- Structural analyses with ANSYS require for each material:
  - Density
  - Compressive strength
  - Tensile strength
  - Young's modulus of elasticity
  - Poison ratio
- Other properties such as bulk and shear modulus are derived from these

Mechanical Properties

	Density **Kg.m^{-3}**	Young's Modulus **MPa**	Poisson Ratio	Compressive Strength **MPa**	Tensile Strength **MPa**
Adobe Brick	1737	54.7	0.17	1.2	0.04
Pinus halepensis	600	10,770	0.17	61	81.6
Olea spp	990	17,770	0.25	62	31
Reed *Arundo donax*	234	9,000	0.25	665	321.7

ANSYS Simulation Settings

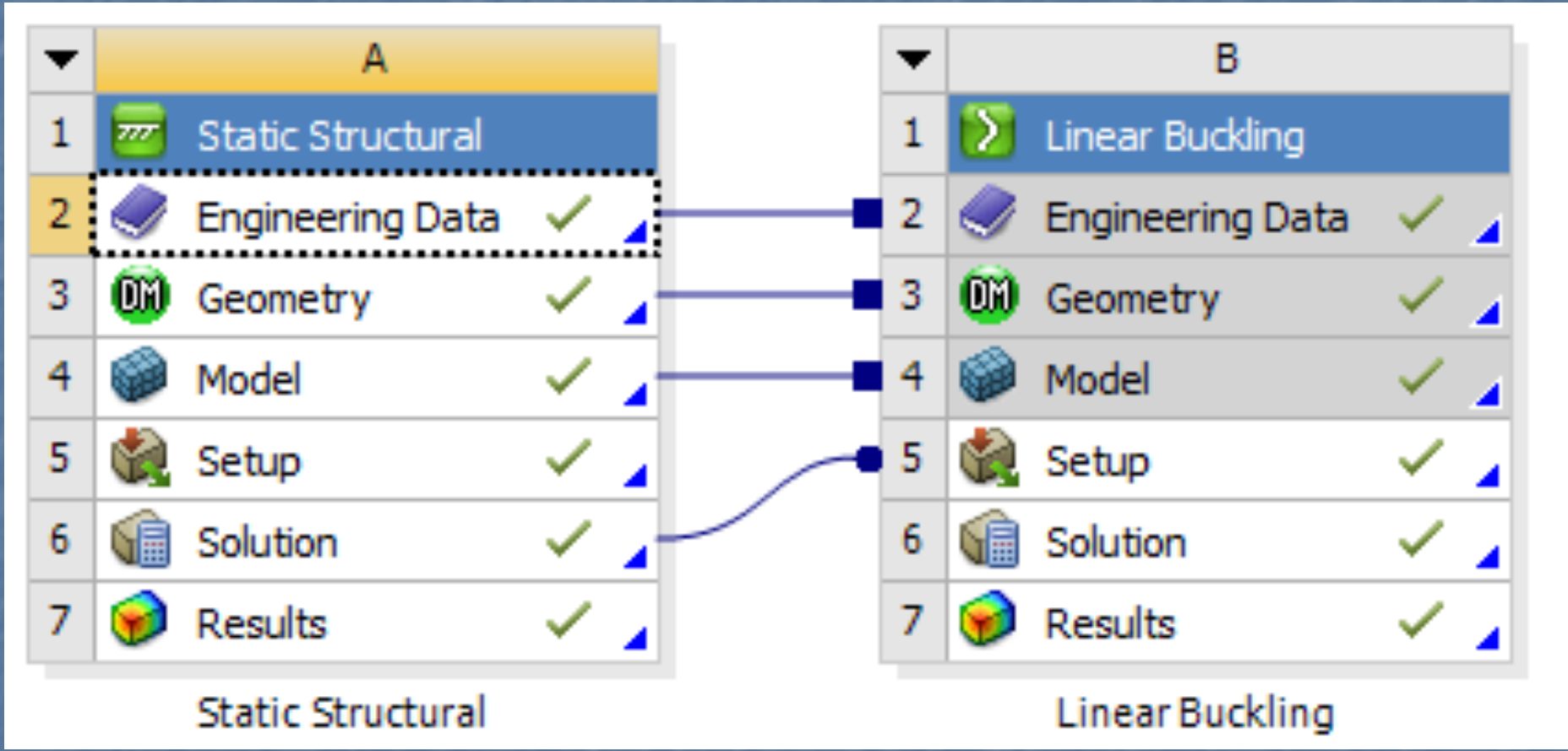

Importing Geometry

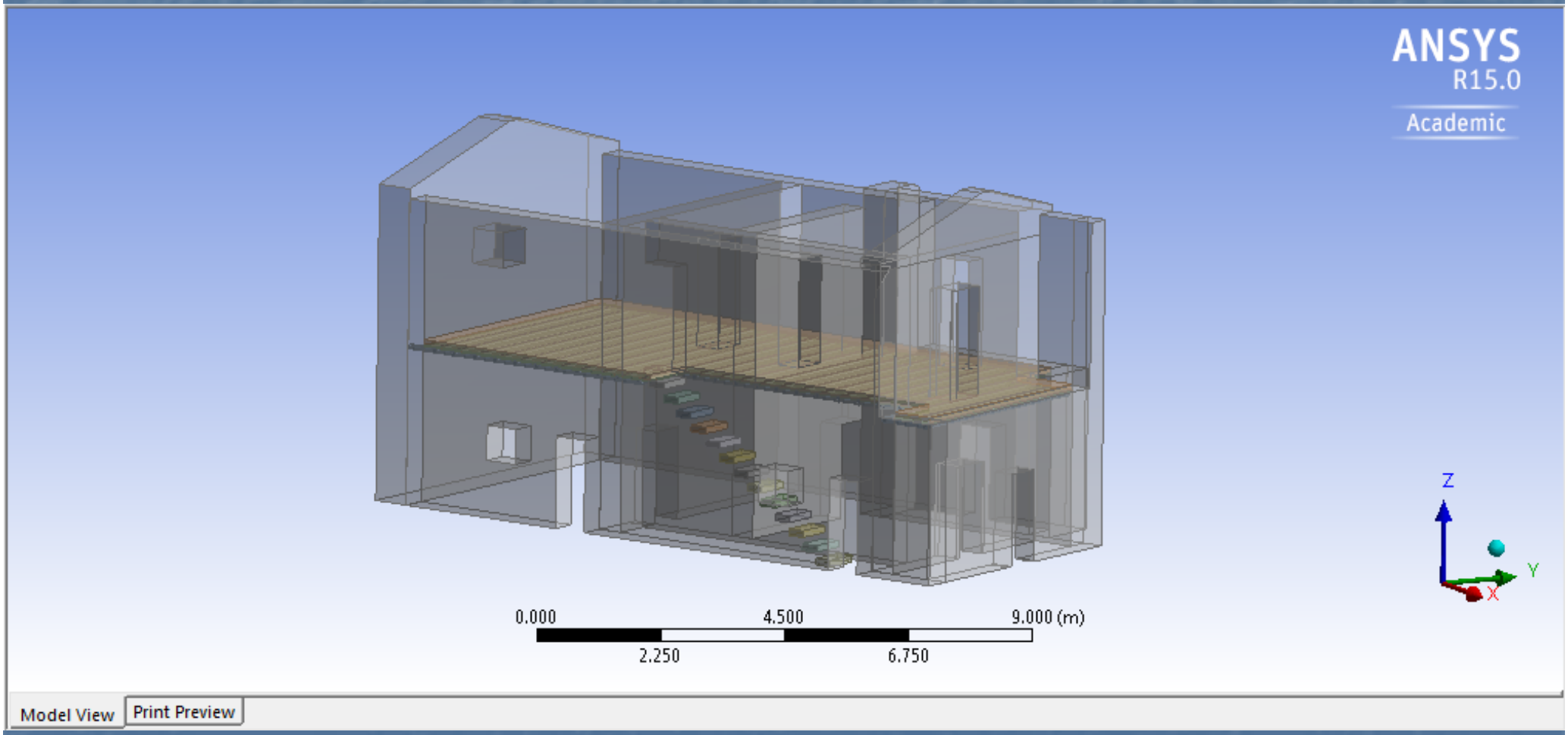

Setting up External Loads

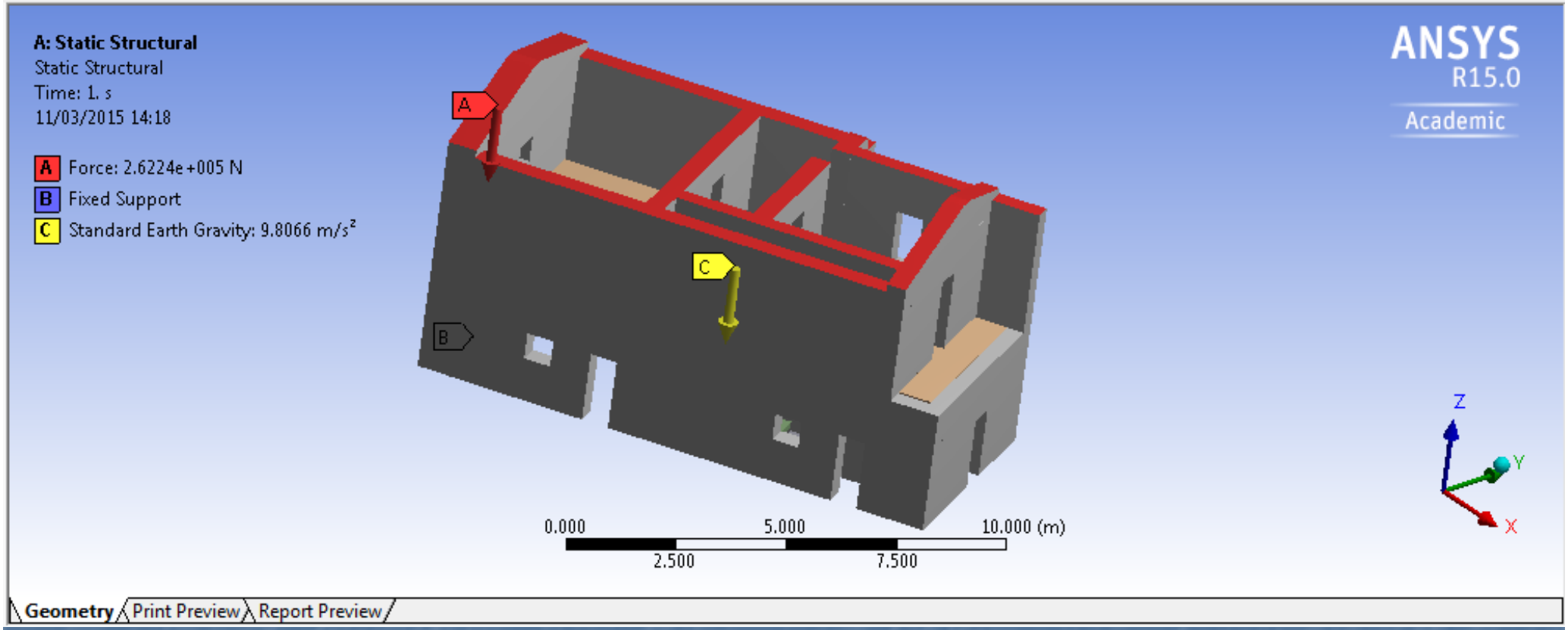

Results: Static Structural Analysis Total Deformation

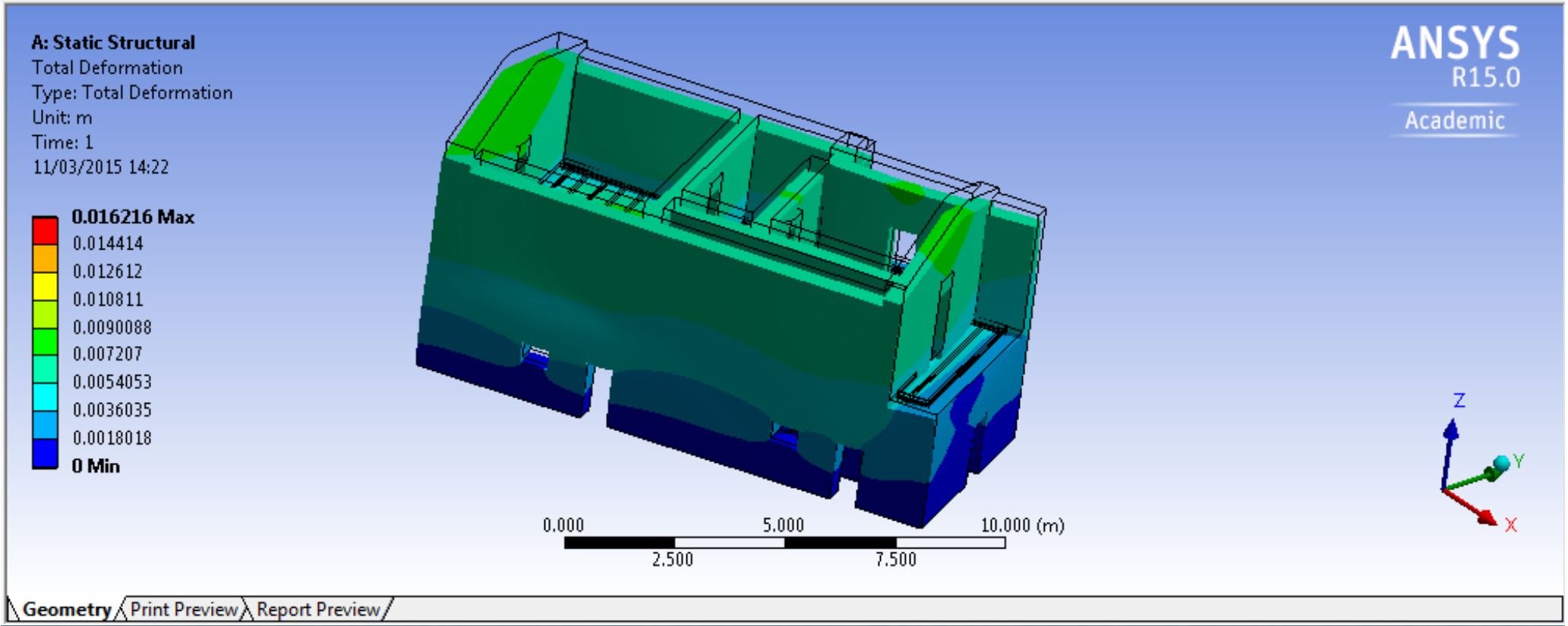

Results: Linear Buckling

No floors
No stairs

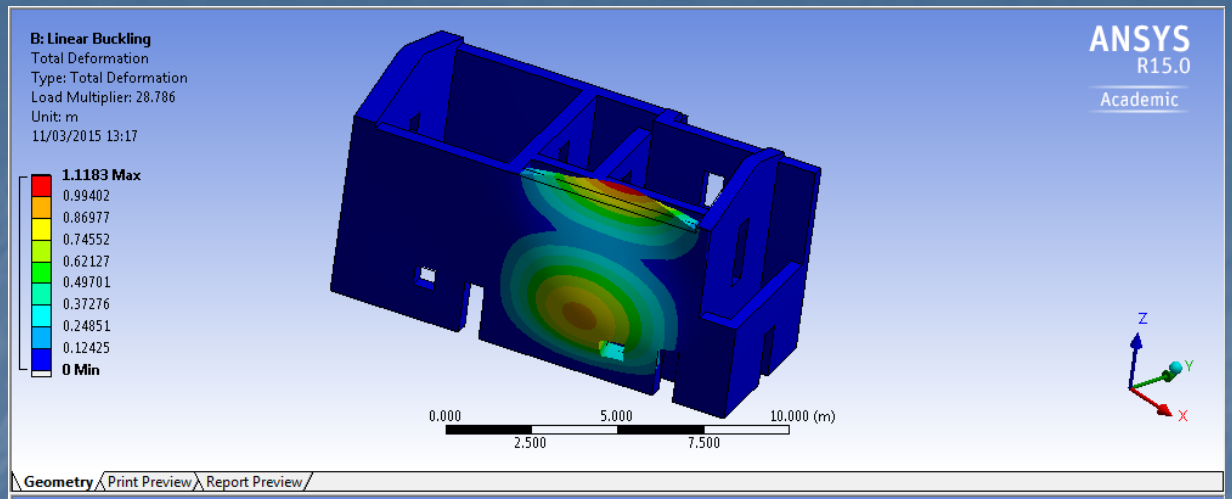

With floors
No stairs

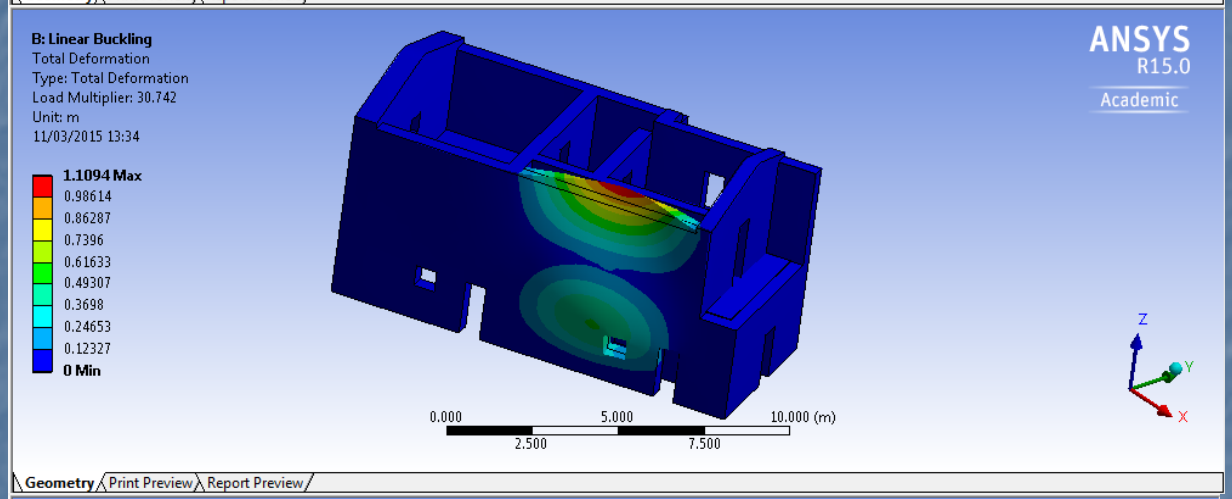

With floors
With stairs

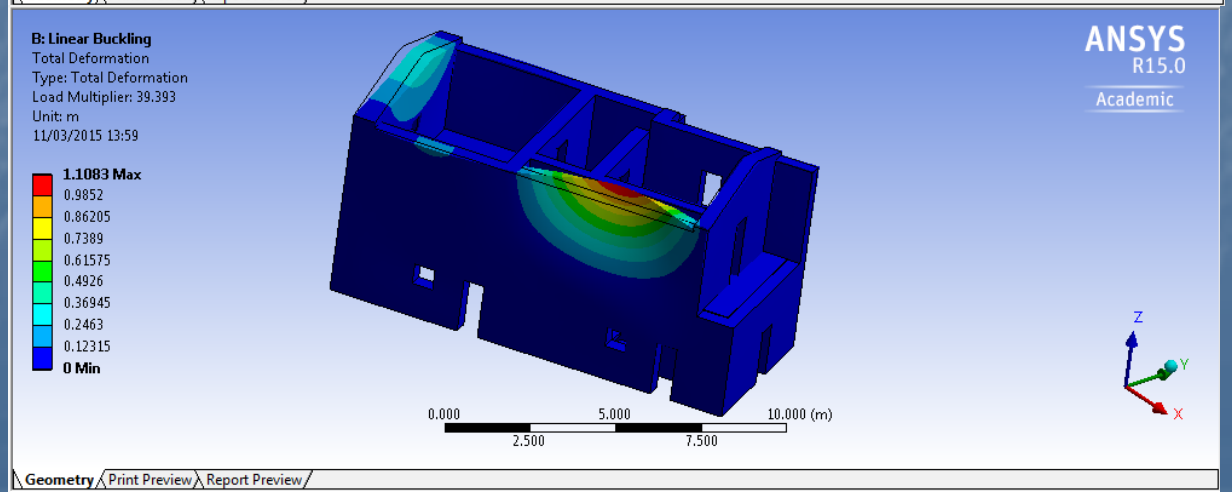

Interpretation

- Design and materials capable of supporting second floor
- Wall more susceptible to buckling is the outer wall to the stairs
- Adding first floor and staircase makes that wall less susceptible to buckling
- Transversal walls at 90 degrees on the corridor on the west side of the house makes the structure more rigid

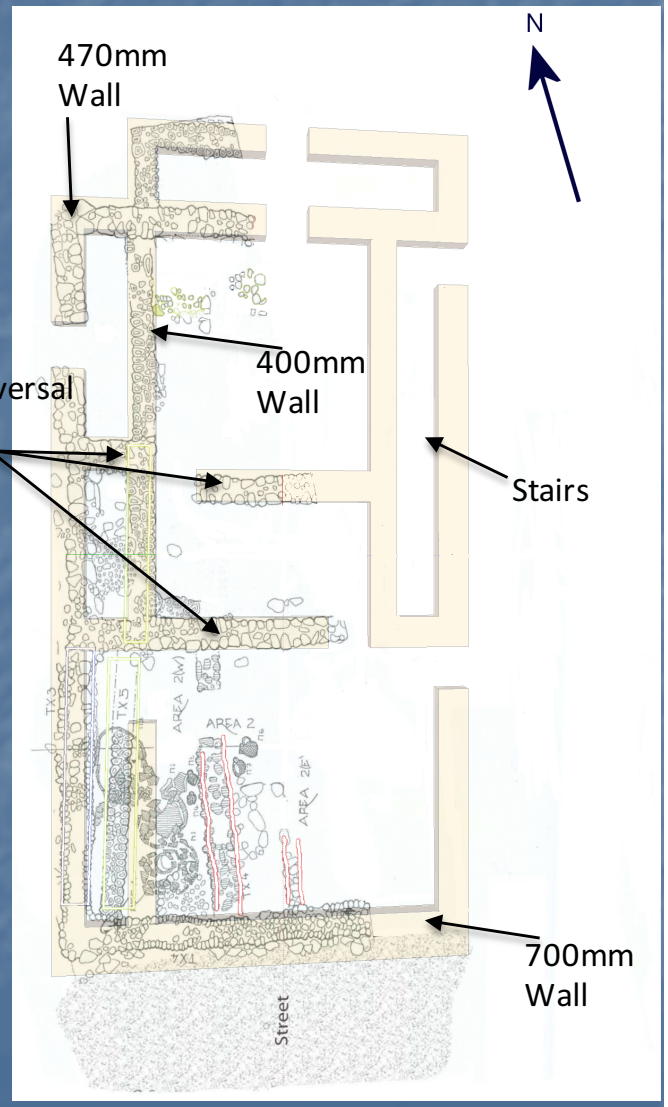

Conclusions

- Modifications of early house structure into the Helike Corridor House achieved the required space and monumental height
- Structural analysis using finite element methods show that structure would be able to support second floor
- Architectural design similarities suggest re-use of prescribed plans
- The function of the house within pre-urban society suggests an administrative seat, assembly hall, kin group or communal storage space
- Further work involves non-linear structural integrity analyses

Tour of the Helike Corridor House